Spectroaphotometer

Content

Notes......1

1.Storage......1

2.Use......1

Overview......1

I. Structure......2

1.1 Appearance......2

1.2 Keys......3

1.3 Power......5

1.3.1 Battery......5

1.3.2 Power Adapter......6

II. Interface description......7

2.1 Boot calibration......7

2.2 Main menu interface......9

2.2.1 Measurement interface......10

2.2.2 Measurement setup interface......11

2.2.3 Record interface......16

2.2.4 System setting......17

III. Product specification......18

Notes

1 Storage

- Upon long time no use, put the instrument into the packing box;
- Store the instrument in cool and dry condition，temperature at -10°C~50°C and relative humidity under 85%;

2 Use

- Avoid stains, dust or other pollution, keep the standard whiteboard clean.
- The operating temperature is 0°C~40°C, relative humidity is under 85%, without condensation.
- Do not use the instrument in the strong magnetic field or dusty,smoky place to avoid abnormal data and unexpected performance
- Avoid foreign matter into the instrument to prevent abnormal measurement data.

Overview

This professional spectrophotometer is developed and produced up to the International Lighting Commission CIE relevant standards and the China national standards. The adoption of advanced import key components guarantees the spectrophotometer the high accuracy，the high stablility and the simple operation.

The spectrophotometer is used to carry out color quality control, color difference control, color difference analysis and on line sample color test in various areas as textile, printing and dyeing, shoes, leather, chemical, plastic, pigment, paint, ink, printing, metal, photography and toys etc., it is also applied to the auxiliary color matching during the processes as injection, inking, painting and spraying coating etc.

I. Structure

1.1 Appearance

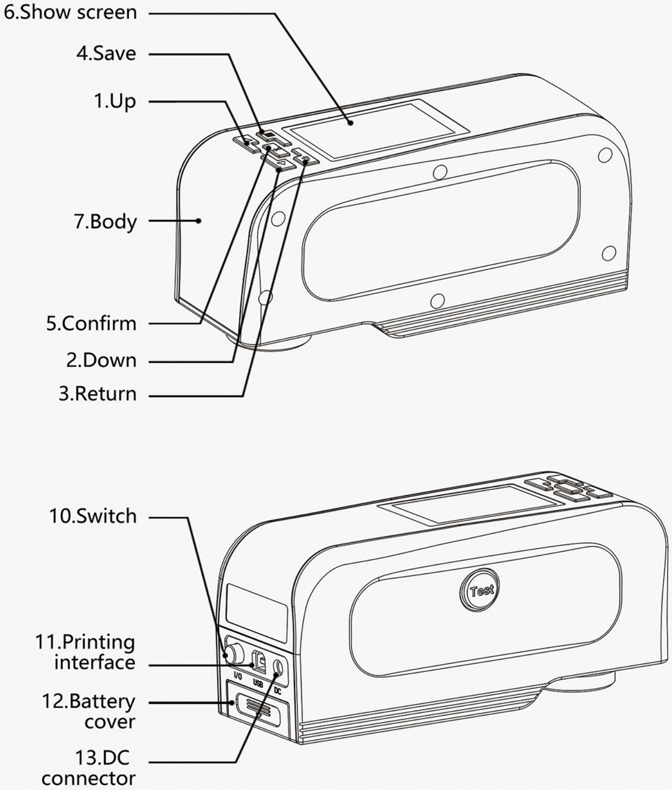
6.Show screen
4.Save
1.Up
7.Body
5.Confirm
2.Down
3.Return
10.Switch
11.Printing interface
12.Battery cover
13.DC connector
Test
I/O
USB
DC

Figure 1. Instrument Appearance

1.2 Keys

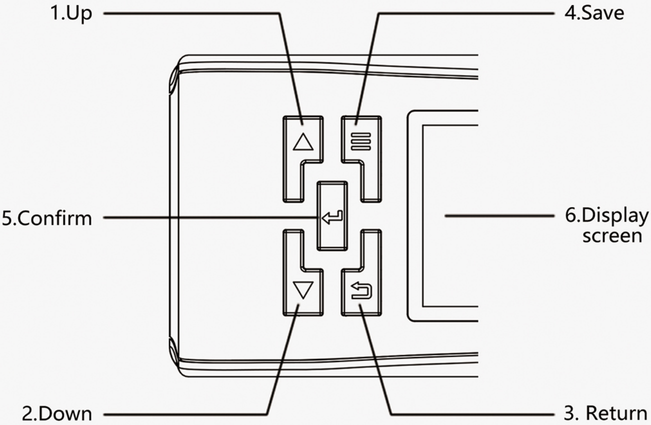
1.Up
4.Save
5.Confirm
6.Display screen
2.Down
3. Return

Figure 2. Bird's View

Up ▲ - Move the position of the cursor in the screen;Adjust the value of the activated items .

Down ▼ - Move the position of the cursor in the screen; Adjust the value of the activated items.

Return ↩ - Return.

Save ≡ - Save settings.

Confirm ↵ - Confirm or activate selected items in the screen; Fast switch between "Sample Measure" and "Type Measure".

Display screen - Show measure result etc.

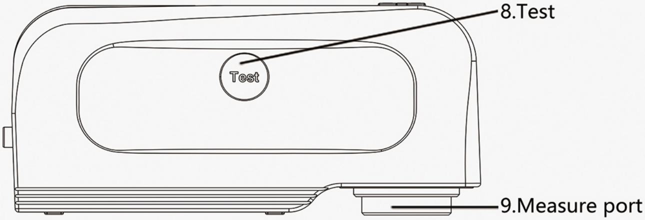
8.Test
Test
9.Measure port

Figure 3. Right View

Test - Carry out the measurement.

Measure port - Optical channel for measure.

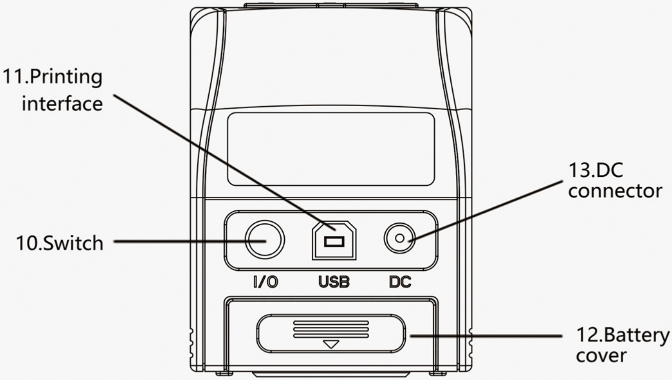
11.Printing interface
13.DC connector
10.Switch
I/O
USB
DC
12.Battery cover

Figure 4. Back View

Switch - In (I) or Out (O) of the instrument.

Printing interface - connect to the printer to print the measuring data.

Battery cover - cover for the special lithium battery compartment

DC connector - dedicated power adapter connector.

1.3 Power

- The spectrophotometer is powered by dedicated power adapter or special lithium battery, the use of other facilities for power supply may damage the spectrophotometer.
- Ensure the Switch is on Out (O) before connecting to the power adapter or mounting the battery.

1.3.1 Battery

1. First check and confirm the Switch is on Out (O), then following the arrow direction as shown on Figure 5, take out the battery cover by pressing down.

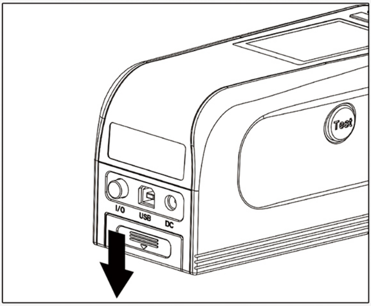
Test
I/O
USB
DC

Figure 5. Remove the battery cover

2. Mount the battery into the compartment as shown in Figure 6, pay attention to the front and back of the battery.

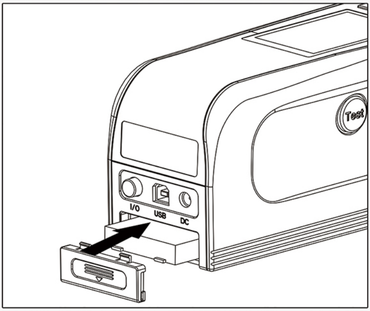
Test
I/O
USB
DC

Figure 6. Mounting the battery

3. Following the arrow direction as shown on Figure 7, press up to mount the battery into the compartment.

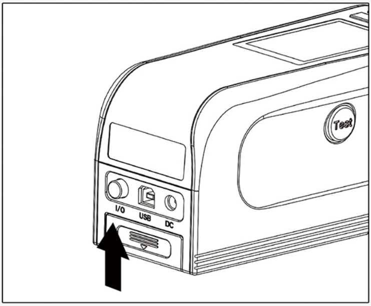
Test
I/O
USB
DC

Figure 7. Mounting the battery cover

1.3.2 Power Adapter

1. 1. First check and confirm the switch is on Out (O).

2. Plug the input cable of the power adapter as shown on Figure 8 into the DC connector.

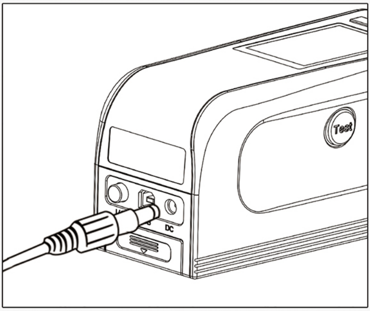

Figure 8. Power Adapter connection

II. Interface description

2.1 Boot calibration

Press the power button, the spectrophotometer starts and enters to the calibration interface, as shown in Figure 9, the “white calibration” and the “black calibration” terms come out.

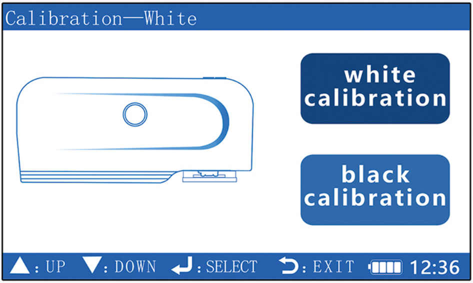
Calibration—White
white calibration
black calibration
▲: UP
▼: DOWN
↵: SELECT
⮌: EXIT
12:36

Figure 9. Clibration -White

First connect the standard whiteboard with the measure port, press the “Confirm” key, as shown in figure 10. Select "YES" and confirm it. The instrument enters to white calibration, as shown in figure 11.

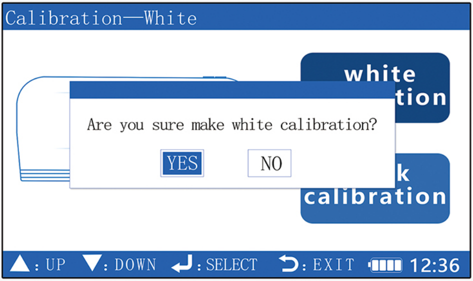
Calibration—White
white
tion
k
calibration
YES
NO
: UP
: DOWN
: SELECT
: EXIT
12:36

Are you sure make white calibration?

Figure 10. Confirm calibration

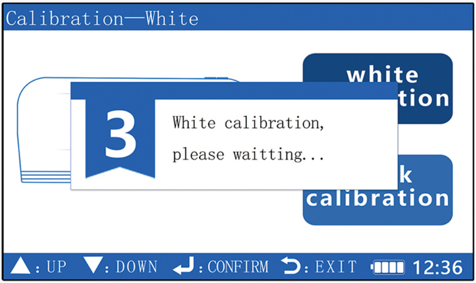
Calibration—White
white
tion
k
calibration
3
: UP
: DOWN
: CONFIRM
: EXIT
12:36

White calibration,
please waitting...

Figure 11. White calibration

The black calibration is similar to the white calibration. Connect the standard blackboard with the measure port, operate as shown in figure 12, figure 13, and figure 14.

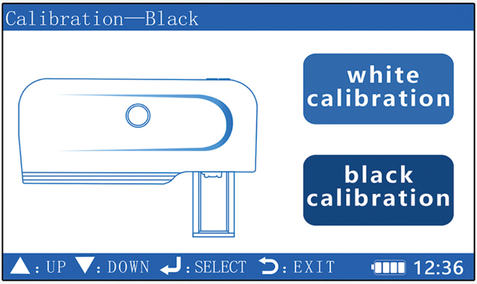
Calibration—Black
white calibration
black calibration
▲: UP ▼: DOWN ↵: SELECT ↶: EXIT
12:36

Figure 12. Boot calibration interface

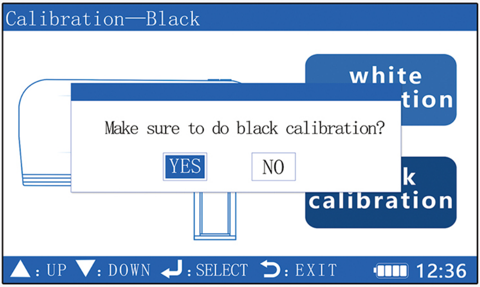
Calibration—Black
white calibration
calibration
YES
NO
▲: UP ▼: DOWN ↵: SELECT ↶: EXIT
12:36

Make sure to do black calibration?

Figure 13. Confirm black calibration

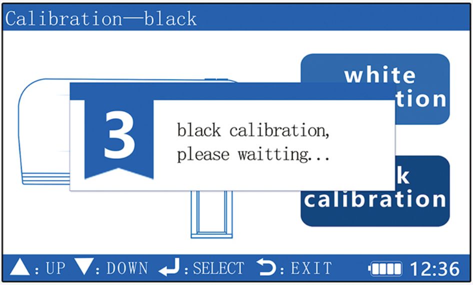
Calibration—black
white calibration
calibration
3
▲: UP ▼: DOWN ↵: SELECT ↶: EXIT
12:36

black calibration,
please waitting...

Figure 14. Black calibration

2.2 Main menu interface

After finishing the white calibration and the black calibration, press the "Confirm" key to enter the system main menu interface, as shown in figure 15.

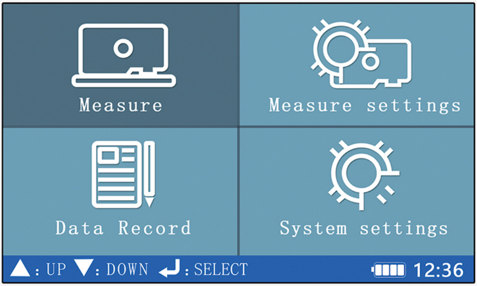
Measure
Measure settings
Data Record
System settings
▲: UP ▼: DOWN ↵: SELECT
12:36

Figure 15. Main menu interface

2.2.1 Measuring interface

Select the "Measure" item in the main menu interface and confirm it, the screen jumps to the "Maesure-Type Measure" interface, as shown in figure 16, press the "Test" key to carry out the type sample measure .

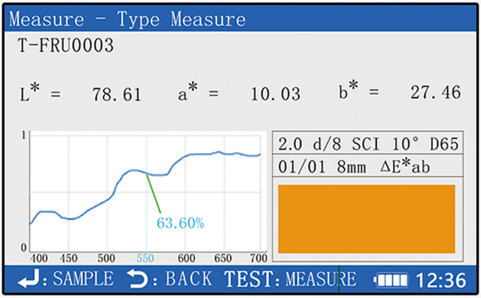
Measure - Type Measure
1
0
400
450
500
550
600
650
700
63.60%
↵: SAMPLE
⮌: BACK
TEST: MEASURE
12:36

T-FRU0003

L* = 78.61 a* = 10.03 b* = 27.46

2.0 d/8 SCI 10° D65

01/01 8mm ΔE*ab

Figure 16. Type Measure

After finishing the type sample measure, press the "Confirm" key to jump to the "Measure - Sample Measure" interface, as shown in figure 17, press the "Test" key to carry out the sample measure.

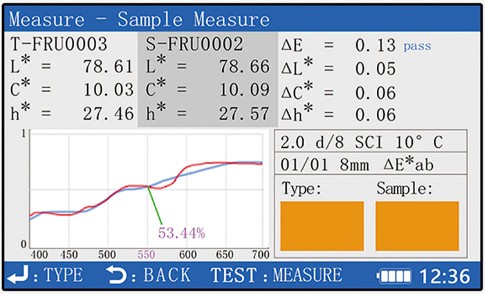
Measure - Sample Measure
1
0
400
450
500
550
600
650
700
53.44%
↵: TYPE
⮌: BACK
TEST: MEASURE
12:36

T-FRU0003
L* = 78.61
C* = 10.03
h* = 27.46

S-FRU0002
L* = 78.66
C* = 10.09
h* = 27.57

ΔE = 0.13 pass
ΔL* = 0.05
ΔC* = 0.06
Δh* = 0.06

2.0 d/8 SCI 10° C

01/01 8mm ΔE*ab

Type: Sample:

Figure 17. Sample Measure

As figure 16 and figure 17 shown, in the reflection spectrum diagram, there is one vertical dashed line , press "Up" key, "Down" key to control the position of the vertical dashed line, each move 10nm, the percentage value beside the line the is the corresponding wavelength reflectivity .

2.2.2 Measurement setup interface

Select the "Measure Settings" in the main menu interface and confirm it, the screen jumps to the "Measure Settings" interface, as shown in figure 18.

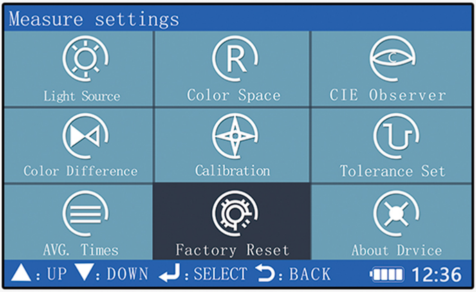
Measure settings
Light Source
Color Space
CIE Observer
Color Difference
Calibration
Tolerance Set
AVG. Times
Factory Reset
About Drvice
: UP
: DOWN
: SELECT
: BACK
12:36

Figure 18. Measure Settings

Select the "Light Source" and confirm it, the screen jumps to the "Light Source Setting" interface, as shown in figure 19. The light source has A, C, D65, F2 (CWF) four standard options.

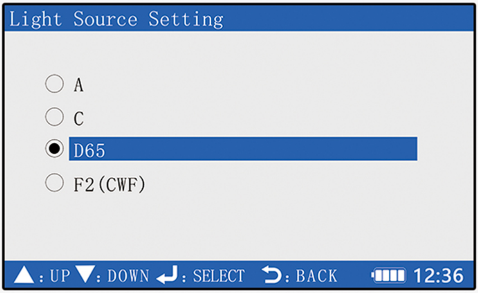
Light Source Setting
: UP
: DOWN
: SELECT
: BACK
12:36

○ A
○ C
● D65
○ F2(CWF)

Figure 19. Light Source Setting

Select "Color Space" and confirm it, the screen jumps to "Color Space Setting" interface, as shown in figure 20, color space has CIEL * a * b *, CIEL * C * h *, Yxy three standard options.

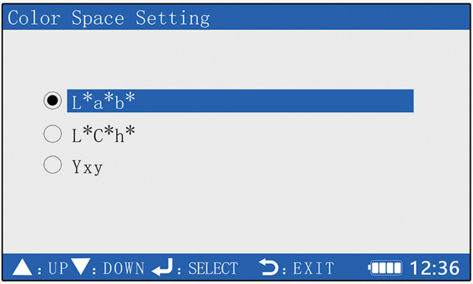

Color Space Setting

● L*a*b*

○ L*C*h*

○ Yxy

▲: UP
▼: DOWN
↵: SELECT
⮌: EXIT
12:36

Figure 20. Color Space Setting

Select the "CIE Observer" and confirm it, the screen jumps to "Observer Perspective Setting" interface, as shown in figure 21, observer has CIE 10 ° standard observer (1976) and CIE 2 ° standard observer (1932) two options.

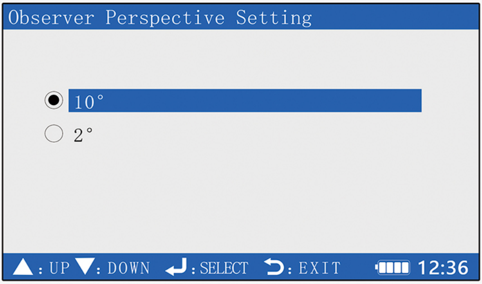

Observer Perspective Setting

● 10°

○ 2°

▲: UP
▼: DOWN
↵: SELECT
⮌: EXIT
12:36

Figure 21. Observer Perspective Setting

Select the "Color Difference " and confirm it, the screen jumps to the "Color Difference Formula Setting" interface, as shown in figure 22, the color difference formula has CIE△E * ab and CIE△E * Ch two options.

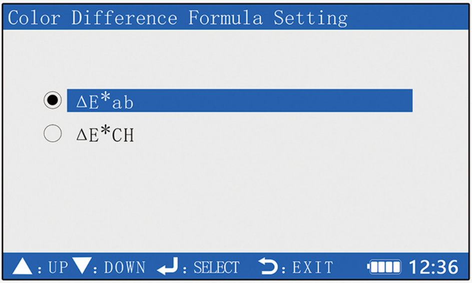

Color Difference Formula Setting

● ΔE*ab

○ ΔE*CH

▲: UP ▼: DOWN ↵: SELECT ⮌: EXIT
12:36

Figure 22. Color Difference Formula Setting

Select the "Calibration" and confirm it, the screen jumps to the "Calibration-White" interface, as shown in figure 23, carry out the white calibration and the black calibration .

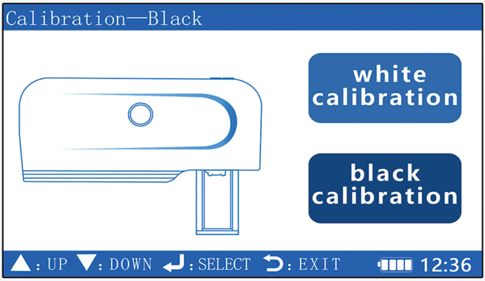

Calibration—Black

white calibration
black calibration
▲: UP ▼: DOWN ↵: SELECT ⮌: EXIT
12:36

Figure 23. Calibration

Select the "Tolerance Setting" and confirm it, the screen jumps to the "Tolerance Setting" interface, as shown in figure 24, the system will judge whether the color difference value is qualified or not by the permissible tolerance value.

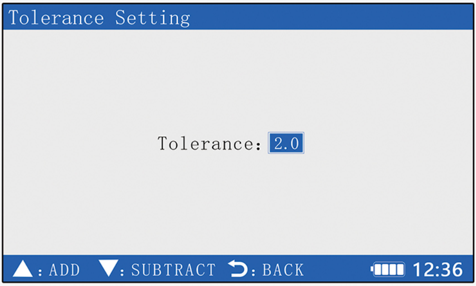
Tolerance Setting
▲: ADD
▼: SUBTRACT
⮌: BACK
12:36

Tolerance: 2.0

Figure 24. Tolerance Setting

Select the "AVG. Times " and confirm it, the screen jumps to the "Average Measure Times Setting" interface, as shown in figure 25, set the average measure time.

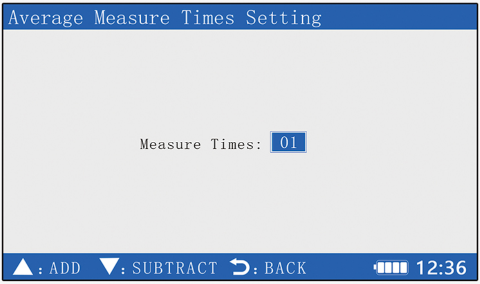
Average Measure Times Setting
▲: ADD
▼: SUBTRACT
⮌: BACK
12:36

Measure Times: 01

Figure 25. Average Measure Times Setting

Select "reset" and confirm it, the dialog interface gets out on the screen, as shown in figure 26.gets out of .

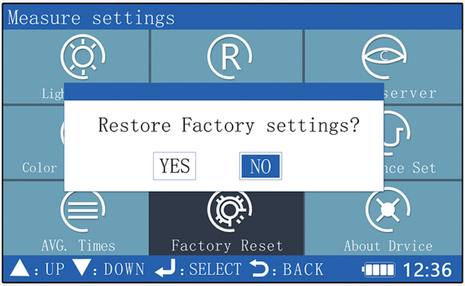
Measure settings
Ligh
server
Color
nce Set
AVG. Times
Factory Reset
About Drvice
: UP
: DOWN
: SELECT
: BACK
12:36

Restore Factory settings?

YES NO

Figure 26. Factory Reset

Select "About Device" and confirm it, the screen jumps to "About Device" interface, as shown in figure 27, the User can check the instrument information in this interface.

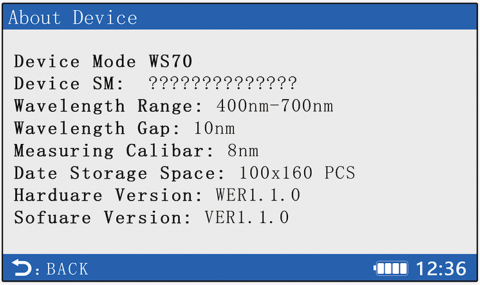
About Device
: BACK
12:36

Device Mode WS70
Device SM: ??????????????
Wavelength Range: 400nm-700nm
Wavelength Gap: 10nm
Measuring Calibar: 8nm
Date Storage Space: 100x160 PCS
Harduare Version: WER1.1.0
Sofuare Version: VER1.1.0

Figure 27. About Device

2.2.3 Record interface

Select the "Data Record" item in the main menu interface and confirm it, the screen jumps to the "Records-Type" interface, as shown in figure 28.

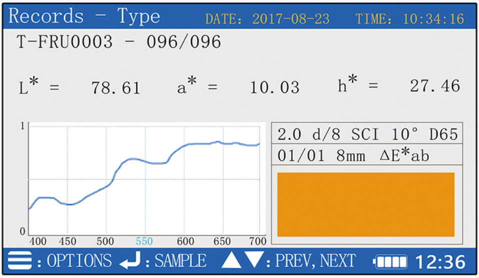

Records - Type DATE: 2017-08-23 TIME: 10:34:16

T-FRU0003 - 096/096

L* = 78.61 a* = 10.03 h* = 27.46

2.0 d/8 SCI 10° D65

01/01 8mm ΔE*ab

1
0
400
450
500
550
600
650
700
: OPTIONS
: SAMPLE
: PREV, NEXT
12:36

Figure 28. Standard sample record

In the "Records-Type" interface, press the "Up" key and "Down" key to view the certain type sample information, press the "Confirm" key, the screen jumps to the "Records-Sample" interface , as shown in figure 29.

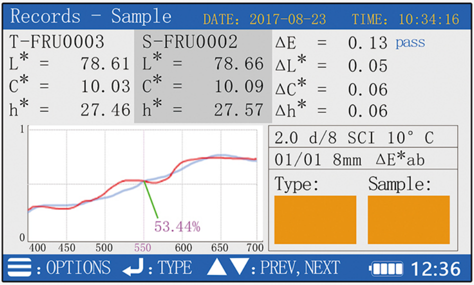

Records - Sample DATE: 2017-08-23 TIME: 10:34:16

T-FRU0003	S-FRU0002	ΔE = 0.13 pass
L* = 78.61	L* = 78.66	ΔL* = 0.05
C* = 10.03	C* = 10.09	ΔC* = 0.06
h* = 27.46	h* = 27.57	Δh* = 0.06

2.0 d/8 SCI 10° C

01/01 8mm ΔE*ab

1
0
53.44%
400
450
500
550
600
650
700
Type:
Sample:
: OPTIONS
: TYPE
: PREV, NEXT
12:36

Figure 29. Records-Sample

In the "Records-Type" interface, press the "Save" key, the screen jumps to the interface , as shown in figure 30, press "Up" key amd "Down" key to Select the certain item, and press the "Confirm" key to confirm it, the screen jumps to the corresponding interface.

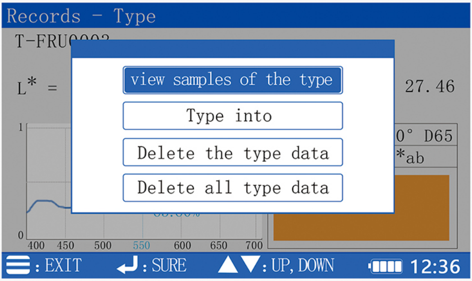

Records - Type
T-FRU0003
L* =
27.46
view samples of the type
Type into
Delete the type data
Delete all type data
0° D65
*ab
1
0
400
450
500
550
600
650
700
: EXIT
: SURE
: UP, DOWN
12:36

Figure 30. Records-Type options

Select the "Type info" item, press "Confirm" key to confirm it, the screen jumps to the "Measure-Sample Measure" interface, as shown in figure 31. In this interface, press the "Up" key and "Down" key to control the position of the vertical dashed line, each move 10nm, the percentage value beside the line the is the corresponding wavelength reflectivity .

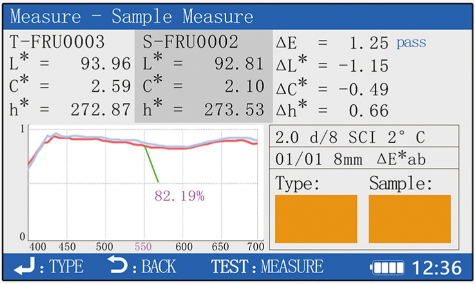
Measure - Sample Measure

T-FRU0003
L* = 93.96
C* = 2.59
h* = 272.87

S-FRU0002
L* = 92.81
C* = 2.10
h* = 273.53

ΔE = 1.25 pass
ΔL* = -1.15
ΔC* = -0.49
Δh* = 0.66

2.0 d/8 SCI 2° C
01/01 8mm ΔE*ab
Type: Sample:

1
0
82.19%
400
450
500
550
600
650
700
: TYPE
: BACK
TEST : MEASURE
12:36

Figure 31. Measure-Sample Measure

2.2.4 System setting

In the main menu interface, select "System Settings" item and confirm it, the screen jumps to "System Settings" interface, as shown in figure 32, in this interface, users can set the Save Mode, Print Mode ,Language, Backlight Time, Auto Power-off Time and the system time.

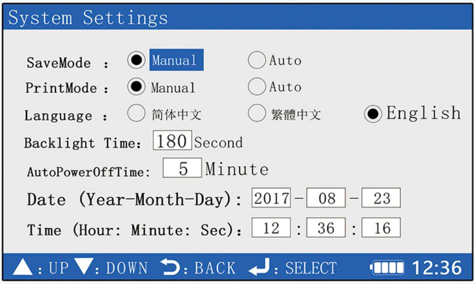
System Settings

SaveMode : ● Manual ○ Auto
PrintMode : ● Manual ○ Auto
Language : ○ 简体中文 ○ 繁體中文 ● English
Backlight Time: 180 Second
AutoPowerOffTime: 5 Minute
Date (Year-Month-Day): 2017 - 08 - 23
Time (Hour: Minute: Sec): 12 : 36 : 16

: UP
: DOWN
: BACK
: SELECT
12:36

Figure 32. System settings

III. Product specification

Model	WS70
Geometric Conditions	CIE Recommended lighting reception method: d/8
Color Space	CIEL*a*b*、CIEL*C*h、Yxy
Standard Light Source	A、C、D65、F2、（CWF）
Color Difference Formula	CIE△E * ab、 CIE△E * Ch
Light Source	Combination LED
Sensor Array	CCD@2048 Pixels
Spectral Way	Diffraction grating
Measuring Caliber	φ8mm
Observer	CIE10°standard observer、CIE2°standard observer
Wavelength coverage	400nm~700nm
Wavelength interval	10nm
Measuring interval	1.5 seconds
Measuring range	L : 0 to 100
Repeated accuracy	△E < 0.08 （take the deviation average after 30 times measuring the whiteboard）
Table Difference	△E < 0.5 (Measure the X-Rite 24-color card)
Battery Power	Measuring 1000 times
Data storage Capacity	Storage standard sample 100
Storage Sample	16,000
Light Source Life	More than 20,000 hours
Display Screen	TFT true color 2.8inch@(16:9)
Size	199*68*90mm
Size of Exterior Package	38*32.5*18.5cm
Weight	2.7kg
Humidity Temperature	Operating Temperature: -10℃~40℃
Storage Temperature	-20℃~50℃
Working Humidity	Relative humidity less than 85%,without condensation
Standard Accessories	Power adapter, standard white board, standard black cavity, lithium battery, specification

Optional Accessories	Micro printer

Spectroaphotometer